PROXXON

New items preview 2026

PROXXON MICROMOT System

INTERNATIONALE EISENWARENMESSE KÖLN

SLIM Cut 45 by DISTAR

Diamond cutting disc with only 0.6 mm thickness. Including special arbor (Ø 3,2 mm) for use with LWB. Ø 45 mm.

NO 28 848

Available now!

Diamond grinding bits

For creating radii in corners, e.g., of cutouts. Ø 5 mm. Shaft 3,2 mm. 2 pieces.

NO 28 246

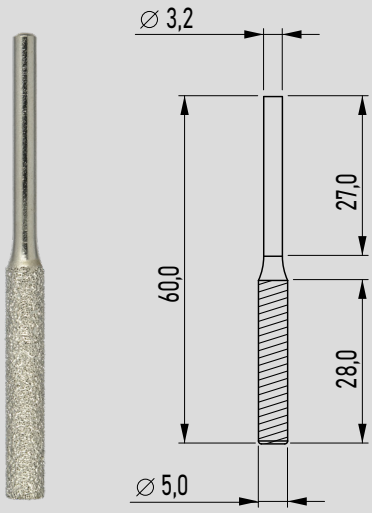

Available now!

Available now!

Diamond-coated flap disc

Straight edge for clean corner-cuts.
High stock removal in granite, marble, stoneware and other ceramic materials. Ø 50 mm. 2 pieces.

NO 28 166	Grit 60
NO 28 167	Grit 120
NO 28 168	Grit 200

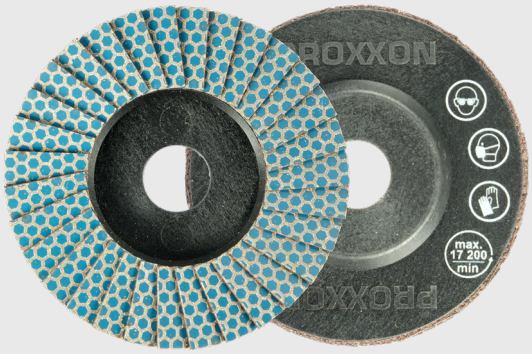

Available now!

Diamond sanding discs

For chamfering and sanding of cutting edges in granite, marble, stoneware and ceramic materials. Self-adhesive type. Ø 50 mm.
6 pieces.

	Grit
NO 28 675	120
NO 28 676	200
NO 28 677	400

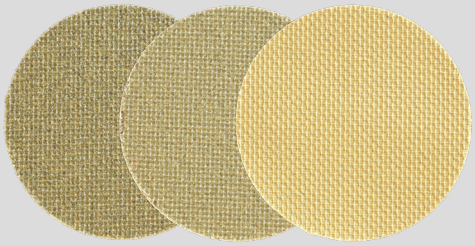

Set of diamond sanding discs

One disc of each grit of 60 – 120 – 200 – 400 – 800 – 1500 – 3000.
Including one foam backing pad.

NO 28 679

PROXXON

INTERNATIONAL HARDWARE FAIR 2026

INTERNATIONALE EISENWARENMESSE KÖLN

3 - 6 March 2026

Cologne, Germany
Hall 10.2
Stand F040 - G049

Visit us in Cologne.
Discover these and many more new products live on site!

PROXXON GmbH • Industriepark Region Trier • Dieselstraße 3–7 • DE-54343 Föhren
Telefon: 0 65 02 - 93 17-0 • E-Mail: office@proxxon.com • www.proxxon.com